I300

CONFIGURABLE INDICATOR / ALARM UNIT

Main Applications

- Food processing plants.
- Water treatment plants.
- Chemical and pharmaceutical plants.
- Weighing

Main Features

- *2 configurable inputs for differential (CH1-CH2) or temperature/humidity measurement.*
- *Custom linearisation for the conversion into engineering units.*
- *Transmitter or sensor (strain gauge) power supply.*
- *Two configurable digital inputs.*
- *Isolated analogue retransmission.*
- *4 configurable alarm points.*
- *2-wire configurable optoisolated serial line.*

Protocol: MODBUS or JBUS.

PROFILE

The I300 is a 96x48 mm (1/8 DIN) universal microprocessor based process indicator.
The operator interface is represented by a 5-digit red LED display, 14mm high, for the main variable, and by a second 2-digit display, 9mm for auxiliary indications and for the measurement unit.
Five red LEDs indicate the output status, a 3-key membrane keyboard allows configuration of the different parameters.
Front face protection is IP65.
I300 accuracy is 0.1% of full scale
The I300 is equipped with two analogue inputs: the first can be configured to the thermocouple, resistance thermometers, even 3 or 4-wire, mV, V, mA, strain-gauge and variable resistance inputs; the second one can be selected among mV, V and mA inputs.
These two inputs may be used as temperature and humidity or as differential.
Input resolution is 32000 divisions and for linear inputs -10000…20000 scale divisions, with 100msec sampling time.
Some input calculation functions are: mean value, counting totalisation, square root, custom linearisations, min. and max. value storage.
Two configurable digital inputs are available for different functions, such as alarm reset hold and peak reset.
In the most complete hardware configuration, the I300 series foresees 4 relay outputs for different alarm functions, a 16000 point isolated analogue output for input retransmission, 2-wire RS485 serial communication with Modbus protocol and speed up to 19200 bauds.
The instrument programming procedure is controlled and protected by passwords, while many diagnostic messages indicate eventual configuration errors.

TECHNICAL DATA

INPUTS

Accuracy 0.1% f.s. ±1 digit.
Sampling time 100 msec by a single input, 200msec by two inputs i.e. differential, temperature/humidity measures.
Input/power supply isolation: 3500Vdc.
Scale limits for linear inputs: -10000…20000, decimal point position configurable.
32000 division resolution.
25 step linearisation for any input type.

CH1 Main Input

TC- Termocoppia

J (Fe-CuNi) -200...870°C / -328...1598°F
K (NiCr-Ni) -200...1232°C / -328...2250°F
N (NiCr-Si-NiSi) -200...1300°C / -328...2372°F
S (Pt10Rh-Pt) -50...1760°C / -58...3200°F
R (Pt13Rh-Pt) -50...1760°C / -58...3200°F
T (Cu-CuNi) -200...400°C / -328...752°F
B (Pt30Rh-Pt6Rh) 100...1800°C / 212...3272°F
E (NiCr-CuNi) -200...950°C / -328...1742°F
L (Fe-CuNi) -200...850°C / -328...1562°F
(**Ni-Ni18Mo**) 0...1400°C / 32...2552°F
WRe5/26 0...2300°C / 32...4172°F
WRe5/26 0,0...1800,0°C / 32,0...3272,0°F

Cold junction inside automatic compensation: ± 1°C.

2/3/4-wire RTD
PT100 -200...800°C / -328...1472°F
JPT100 -190...600°C / -310...1112°F
Ni100 -60...180°C / -76...356°F

DC – Linear
0…50mV,
0…100mV
0…1V
0…10V
0…20mA, 4…20mA, -20…20mA with 2.5Ω 0.1% external shunt.
Input impedance:
10V voltage inputs: Ri = 100KΩ
mA current inputs: Ri = 2.5Ω
for other inputs Ri > 1MΩ

Sensor
(Strain gauge)
-50…50mV
Input impedante Ri>1MΩ

Variable Resistance
0.00…200.00 Ω /0.2mA
0.00…200.00 Ω/ 0.4mA

CH2 Secondary Input
(available only in temperature measurement [CH1], humidity [CH2] or differential measurement [CH1-CH2] functions).

DC – Linear
0…50mV,
0…100mV
0…1V
0…10V
0…20mA, 4…20mA, -20…20mA with 2.5Ω 0.1% external shunt.
Input impedance:
10V voltage inputs: Ri = 100KΩ
mA current inputs: Ri = 2.5Ω
for other inputs Ri > 1MΩ
(*) with external voltage divider if contemporary with 10V CH1 input.

DIGITAL
2 inputs from contacts free of potential.
Configurable functions:
- Indication, output retransmission, keyboard hold.
- Alarm, min. max and totaliser value reset.

OUTPUT
Analogue
- Configurable for CH1 main input or CH2 secondary input retransmission.
- 1000Vdc input/output isolation.
- Updating every 100msec.
- 16000 division resolution, 0.1% f.s. accuracy.
0…10V, 1KΩ min. load
0...20mA, 4...20mA, 750Ω max. load impedance.

Relay
- 4 configurable outputs
- NO, NC, 5A, 230V contacts : cosφ = 1

SERIAL LINK
2-wire RS485 interface (1200…19200 bauds).
Protocol: MODBUS, JBUS.

POWER SUPPLY
Standard: 100…240Vac ± 10%
On request: 24/48Vac/dc ± 10%
50/60Hz; 10VA max.

TRANSMITTER/SENSOR
(Strain Gauge) Power Supply
24Vdc, max 50mA with short-circuit protection.
Strain-gauge power supply adjustable with 1mV 4.5…10.2V resolution, max 30mA.

AMBIENT CONDITIONS
Working temperature range: -5…55°C
Storage temperature range: -20…70°C
Humidity: 10…90% Hr non condensing

ALARMS
• 4 configurable alarm points
• Alarm points with configurable limits on the whole selected scale.
• The hysteresis of each alarm is configurable individually.
• Possibility of alarm memory, keyboard reset, digital input or input from serial line.
• Selectable delay: 1…10sec.

FUNCTIONS
• Configurable offset: ± 500 points (for CH1 input only)
• Filter selectable on CH1 input
• 24 linearisation segments for each input
• Min. and max. value memory.
• Calculation of a mean value as to a configurable time period: 0…99999sec, min. or hours
• Square root calculation available for CH2 input

WEIGHT
320g (full version)

FACEPLATE DESCRIPTION

A - Indication of process variable:
five14mm high digits, red LED display.
B - Auxiliary indication:
Two 9mm high digits, red LED display.
C - 5 indication red LEDs
D - “Raise” key
E - “Lower” key
F - “Enter” key to configure

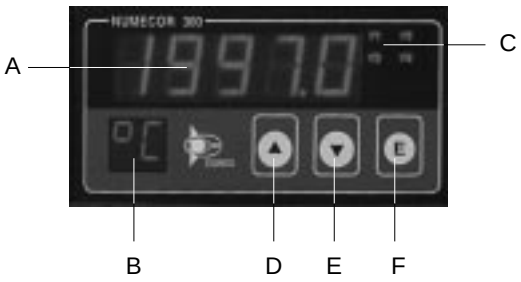

IP 65 faceplate protection

DIMENSIONS AND CUT-OUT

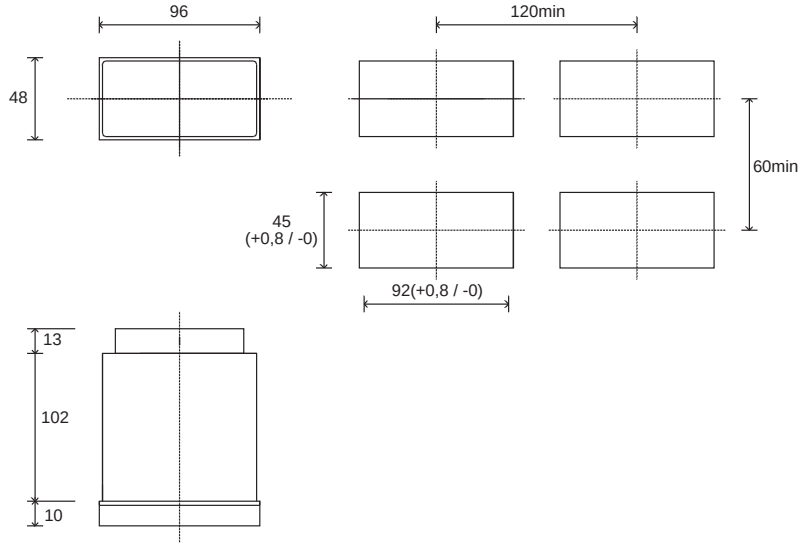

Dimensions 96x48 (1/8 DIN), depth 115 mm

CONNECTION DIAGRAM

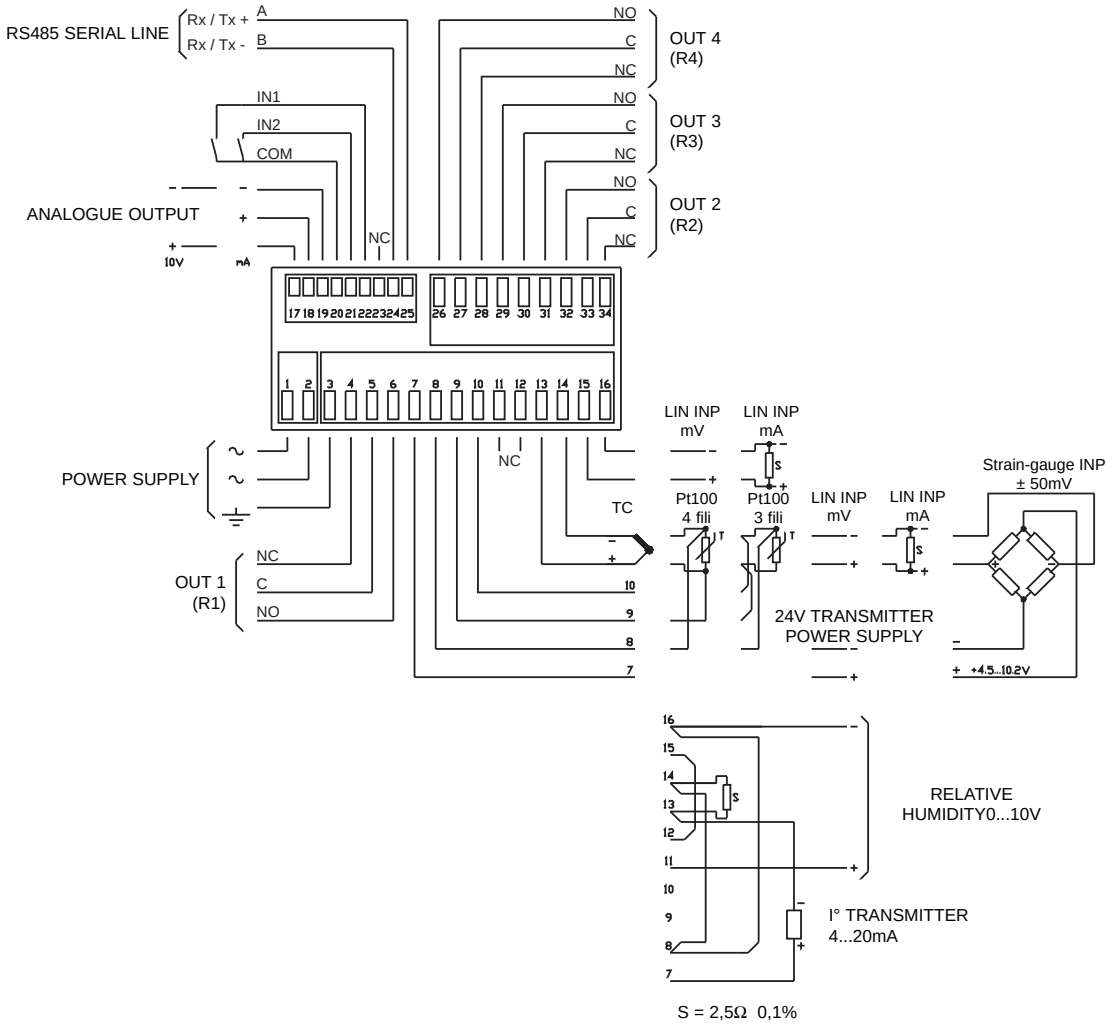

⚠ Follow user's manual mounting instruction to install the instrument properly.

ORDER CODE

I3 ☐ ☐ R

POWER SUPPLY	
85...264Vac	0
24Vac/dc	1
48Vac/dc	2

INPUTS / OUTPUTS	
1 Relay	1
4 Relays	2
4 Relays + Analogue Output + 2 Digital Inputs	3
4 Relays + Digital Communication + 2 Digital Inputs	4
4 Relays + Digital Communication + Analogue Output + 2 Digital Inputs	5

GEFRAN spa reserves the right to make any modification of the design or function, at any moment without prior notice.

The instrument conforms to the European Directives 89/336/CEE and 73/23/CEE with reference to the generic standards:
-EN 50082-2 (immunity in industrial environments) **– EN 50081-1** (emission in residential environments) **- EN 61010-1**(safety)

GEFRAN

GEFRAN spa via Sebina, 74 - 25050 Provaglio d'Iseo (BS)
ph. 03098881 - fax 0309839063 - Internet: http://www.gefran.com

cod. **85396 - 07/00**